
# CAM CLUTCHES
# BREU SERIES

TSUBAKI

TSUBAKI EMERSON

# - the working principle of lift-off Cam Clutches -

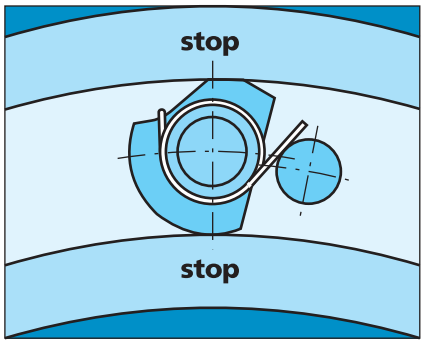


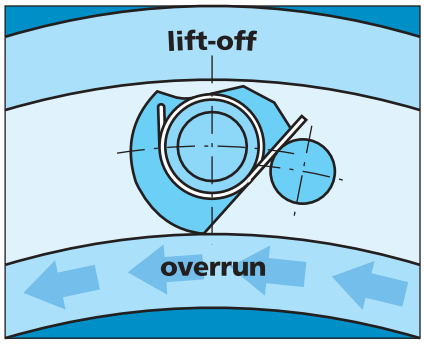


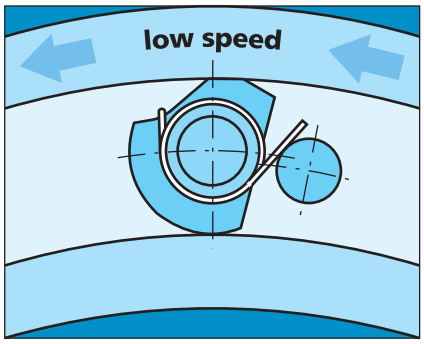




Cams of BREU series Cam Clutches are designed to "lift off", having no more contact with inner- and outer race when the clutch is overrunning. Loss of contact is caused by centrifugal force applied to all cams, having unbalanced weights due to their shape. This Cam Clutch has an excellent performance when used for overrunning at "high-speed inner race/low speed engaged outer race" features or when backstopping at "high speed inner race overrunning" features. The cams' lift off function warrantee a long wear life and thus BREU series Cam Clutches can be used in a wide

range of applications for many different types of machinery. BREU series Cam Clutches are modular components with flanges (E1, E2, E5 and E7), torque arms (E3) and covers (E4) as optional parts.

The cams engage between inner- and outer race when the Cam Clutch is stationary. The clutch runs without contact of cams when the inner race (=load side) overruns at high speed. The cams are in contact with inner and outer race when the inner race (= load side) rotating speed slows down. At that moment the outer race drives the inner race at low rotation speed. Cams lose contact with outer and inner race when operating at a given minimum speed and a given maximum speed (see page 2), which ensures a long lifetime of the clutch.

# - Cam Clutches BREU-series -

## - basic models -

*The basic model BREU Cam Clutch is available with and without (-K) keyway.*

## - capacities -

| Model | Torque capacity | Inner race overrunning speed | | Max. engagement |
|---|---|---|---|---|
| | N·m | Min. (r/min) | Max. (r/min) | Speed (r/min) |
| BREU 30 | 607 | 880 | 3,600 | 350 |
| BREU 35 | 686 | 780 | 3,600 | 300 |
| BREU 40 | 980 | 720 | 3,600 | 300 |
| BREU 45 | 1,078 | 670 | 3,600 | 280 |
| BREU 50 | 1,715 | 610 | 3,600 | 240 |
| BREU 55 | 1,960 | 580 | 3,600 | 220 |
| BREU 60 | 3,479 | 490 | 3,600 | 200 |
| BREU 70 | 4,735 | 480 | 3,600 | 200 |
| BREU 80 | 6,517 | 450 | 3,600 | 190 |
| BREU 90 | 8,526 | 420 | 3,000 | 180 |
| BREU100 | 14,210 | 460 | 2,500 | 180 |
| BREU130 | 20,384 | 420 | 2,200 | 180 |
| BREU150 | 33,908 | 370 | 1,300 | 180 |

## - general information -

BREU series Cam Clutches are modular type one way clutches, supplied as a basic type clutch with standardized optional parts (E1, E2, E5 and E7 flanges, E3 torque arms and E4 covers).

The operational temperature range is –40°C up to +40°C.

All models are pre-greased at assembly.

Injection of an excessive quantity of grease to the bearings during maintenance will cause problems to the function of the cam clutch. It's springs cannot function properly any longer.

Tsubakimoto recommends a shaft tolerance of h7 with a standard key.

The keyways of all Tsubaki Cam Clutches are standardized according to DIN6885.1

Tsubakimoto recommends an H7 or H8 tolerance for dimensions B and E to re-work sprockets , gears, pulleys or other parts to be fitted.

## - installation and usage -

1. Before assembly clean both surfaces of the outer race as well as the surface of the flange, cover, torque arm or other fitted part.
2. Verify the direction of rotation indicated with an arrow before fitting the optional parts.
3. When installing a sprocket, gear or other part, fix them with a hexagonal socket cap bolt.
4. When assembling optional parts in opposite position, the direction of rotation of the Cam Clutch can be changed.
5. Fix grease nipple and set screw to each operational part.
6. When mounting the clutch onto the shaft, apply pressure to the inner race but never to the outer race. Tap the inner race lightly with a soft hammer moving around the race circumference so the Cam Clutch moves slowly and uniformly onto the end of the shaft.
7. Do not use grease that contains EP additives.



## - additional information -

For regularly updated information on Cam Clutches you are invited to visit:
http://www.tsubaki-emerson.co.jp

# - basic type Cam Clutches BREU-series -

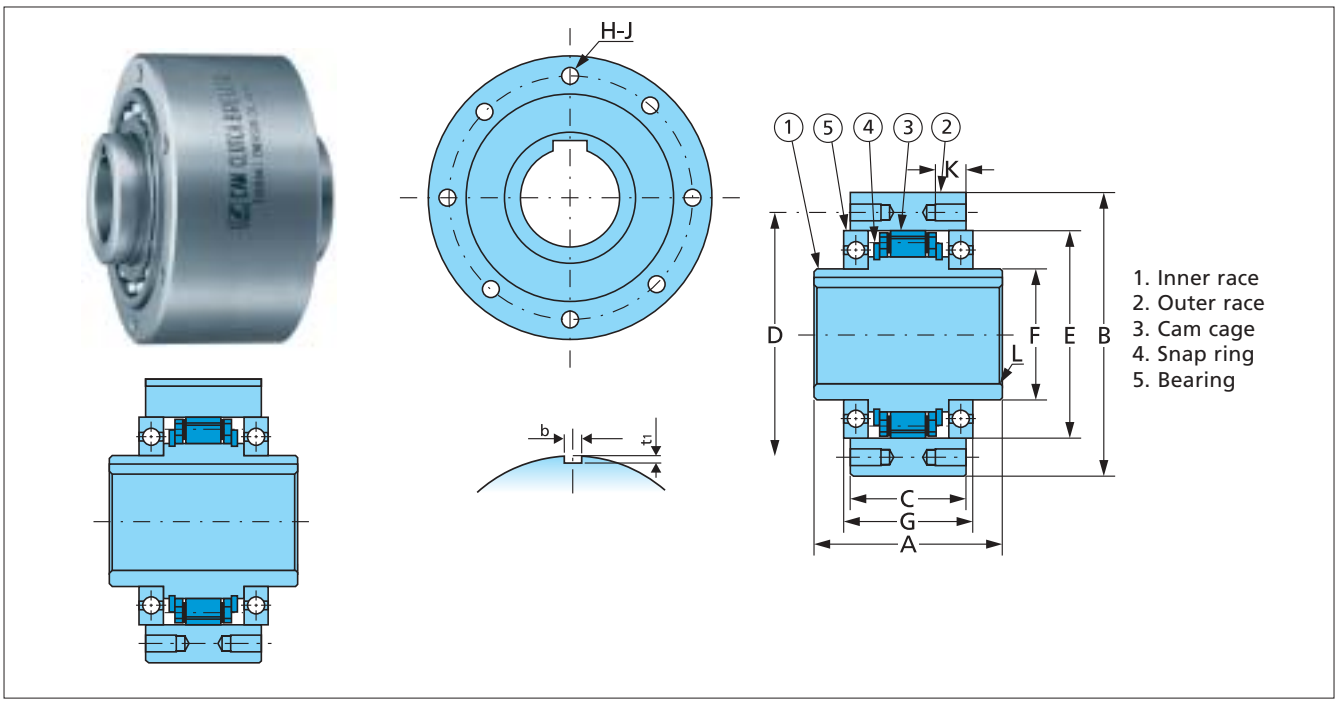


*Basic type BREU Cam Clutch. Summary of parts and dimensions (refering to table below).*

## - dimensions and weight -

| Model | Bore size | Keyway | A | B | C | D | E | F | G | H-J | K | L | b | t1 | Weight |
|---|---|---|---|---|---|---|---|---|---|---|---|---|---|---|---|
| | H7 | | | h7 | | | | | | | | | P10 | | kg |
| BREU 30 | 30 | 8×3.3 | 76 | 100 | 51 | 87 | 75 | 45 | 56 | 6-M6 | 10 | 1.0 | 8 | 4.0 | 2.7 |
| BREU 35 | 35 | 10×3.3 | 79 | 110 | 50 | 96 | 80 | 50 | 56 | 6-M6 | 12 | 1.0 | 10 | 5.0 | 3.2 |
| BREU 40 | 40 | 12×3.3 | 86 | 125 | 53 | 108 | 90 | 55 | 59 | 6-M8 | 14 | 1.3 | 12 | 5.0 | 4.4 |
| BREU 45 | 45 | 14×3.8 | 86 | 130 | 53 | 112 | 95 | 60 | 59 | 8-M8 | 14 | 1.3 | 14 | 5.5 | 4.7 |
| BREU 50 | 50 | 14×3.8 | 94 | 150 | 64 | 132 | 110 | 70 | 72 | 8-M8 | 14 | 1.3 | 14 | 5.5 | 7.6 |
| BREU 55 | 55 | 16×4.3 | 104 | 160 | 66 | 138 | 115 | 75 | 72 | 8-M10 | 16 | 1.5 | 16 | 6.0 | 8.9 |
| BREU 60 | 60 | 18×4.4 | 120 | 170 | 84 | 150 | 125 | 80 | 95 | 10-M10 | 16 | 1.5 | 18 | 7.0 | 12.5 |
| BREU 70 | 70 | 20×4.9 | 134 | 190 | 95 | 165 | 140 | 90 | 108 | 10-M10 | 16 | 1.8 | 20 | 7.5 | 17.2 |
| BREU 80 | 80 | 22×5.4 | 144 | 210 | 100 | 185 | 160 | 105 | 108 | 10-M10 | 16 | 1.8 | 22 | 9.0 | 22.4 |
| BREU 90 | 90 | 25×5.4 | 158 | 230 | 115 | 206 | 180 | 120 | 125 | 10-M12 | 20 | 2.0 | 25 | 9.0 | 30.3 |
| BREU100 | 100 | 28×6.4 | 186 | 270 | 124 | 240 | 210 | 140 | 135 | 10-M16 | 24 | 2.0 | 28 | 10.0 | 45.5 |
| BREU130 | 130 | 32×7.4 | 212 | 310 | 152 | 278 | 240 | 160 | 168 | 12-M16 | 24 | 2.5 | 32 | 11.0 | 67.0 |
| BREU150 | 150 | 36×8.4 | 246 | 400 | 180 | 360 | 310 | 200 | 194 | 12-M20 | 32 | 2.5 | 36 | 12.0 | 145.0 |

## - installation and usage -

1. When mounting the clutch onto the shaft, apply pressure to the inner race but never to the outer race. Tap the inner race lightly with a soft hammer moving around the race circumference so the Cam Clutch moves slowly and uniformly onto the end of the shaft.
2. The ambient temperature range is -40°C to +40°C.
3. All models are pre-greased.
4. Refer to page 2 for additional installation instructions and to page 10 for information on lubrication and maintenance.

NOTE

Too much additional greasing of the bearings will cause malfunction of the Cam Clutch mechanism.

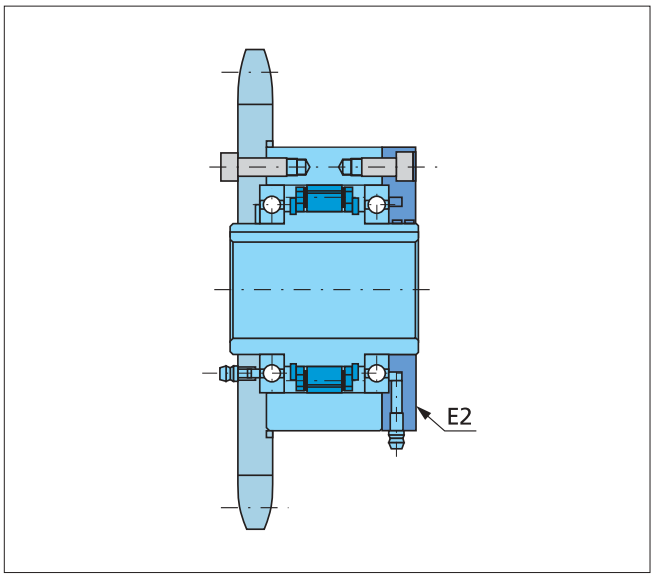


*Installation example 1.*

# - Cam Clutches BREU-series with E1 and E2 flange -

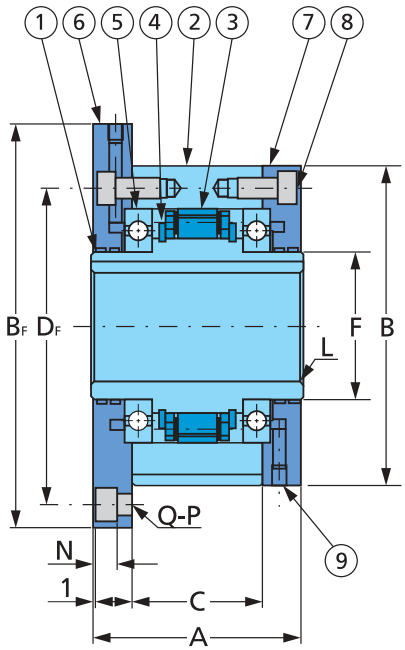


1. Inner race
2. Outer race
3. Cam cage
4. Snap ring
5. Bearing
6. E1 flange
7. E2 flange
8. Hex socket cap bolt
9. Set screw

*Basic type BREU Cam Clutch provided with an E1 and an E2 flange. Summary of parts and dimensions. (Refering to table below.)*

## - dimensions and weight -

| Model | Bore size | Keyway | A | B | BF | C | DF | F | L | M | N | Q-P | Weight |
|---|---|---|---|---|---|---|---|---|---|---|---|---|---|
| | H7 | | | h7 | | | | | | | | | kg |
| BREU 30 E1+E2 | 30 | 8×3.3 | 76 | 100 | 128 | 51 | 114 | 45 | 1.0 | 11.5 | 6.8 | 6-Ø 6.6 | 4.1 |
| BREU 35 E1+E2 | 35 | 10×3.3 | 79 | 110 | 140 | 50 | 124 | 50 | 1.0 | 13.5 | 6.8 | 6-Ø 6.6 | 5.2 |
| BREU 40 E1+E2 | 40 | 12×3.3 | 86 | 125 | 160 | 53 | 142 | 55 | 1.3 | 15.5 | 9.0 | 6-Ø 9.0 | 7.5 |
| BREU 45 E1+E2 | 45 | 14×3.8 | 86 | 130 | 165 | 53 | 146 | 60 | 1.3 | 15.5 | 9.0 | 8-Ø 9.0 | 7.9 |
| BREU 50 E1+E2 | 50 | 14×3.8 | 94 | 150 | 185 | 64 | 166 | 70 | 1.3 | 14.0 | 9.0 | 8-Ø 9.0 | 11.1 |
| BREU 55 E1+E2 | 55 | 16×4.3 | 104 | 160 | 204 | 66 | 182 | 75 | 1.5 | 18.0 | 11.0 | 8-Ø 11.0 | 14.7 |
| BREU 60 E1+E2 | 60 | 18×4.4 | 120 | 170 | 214 | 84 | 192 | 80 | 1.5 | 17.0 | 11.0 | 10-Ø 11.0 | 17.9 |
| BREU 70 E1+E2 | 70 | 20×4.9 | 134 | 190 | 234 | 95 | 212 | 90 | 1.8 | 18.5 | 11.0 | 10-Ø 11.0 | 24.5 |
| BREU 80 E1+E2 | 80 | 22×5.4 | 144 | 210 | 254 | 100 | 232 | 105 | 1.8 | 21.0 | 11.0 | 10-Ø 11.0 | 32.5 |
| BREU 90 E1+E2 | 90 | 25×5.4 | 158 | 230 | 278 | 115 | 254 | 120 | 2.0 | 20.5 | 13.0 | 10-Ø 14.0 | 40.5 |
| BREU100 E1+E2 | 100 | 28×6.4 | 186 | 270 | 335 | 124 | 305 | 140 | 2.0 | 30.0 | 17.5 | 10-Ø 18.0 | 68.0 |
| BREU130 E1+E2 | 130 | 32×7.4 | 212 | 310 | 380 | 152 | 345 | 160 | 2.5 | 29.0 | 17.5 | 12-Ø 18.0 | 95.0 |
| BREU150 E1+E2 | 150 | 36×8.4 | 246 | 400 | 485 | 180 | 445 | 200 | 2.5 | 32.0 | 21.5 | 12-Ø 22.0 | 197.0 |

## - installation and usage -

1. By installing E1 flange and E2 flange in the opposite way, the direction of rotation can be changed.
2. When mounting the clutch onto the shaft, apply pressure to the inner race but never to the outer race. Tap the inner race lightly with a soft hammer moving around the race circumference so the Cam Clutch moves slowly and uniformly onto the end of the shaft.
3. All models are pre-greased.
4. Fix grease nipples to optional parts.
5. The ambient temperature range is -40°C to +40°C.
6. Refer to page 2 for additional installation instructions and to page 10 for information on lubrication and maintenance.

NOTE

Too much additional greasing of the bearings will cause malfunction of the Cam Clutch mechanism.

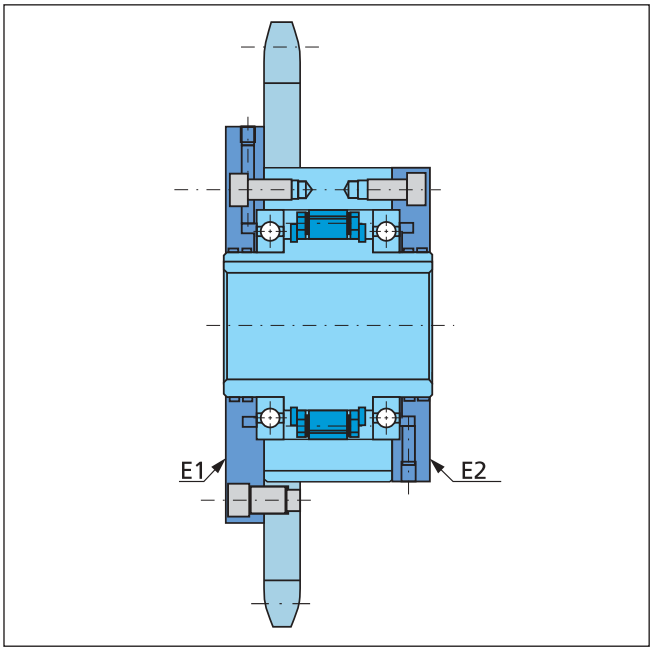


*Installation example 2.*

# - Cam Clutches BREU-series with E2 flange and E3 torque arm -

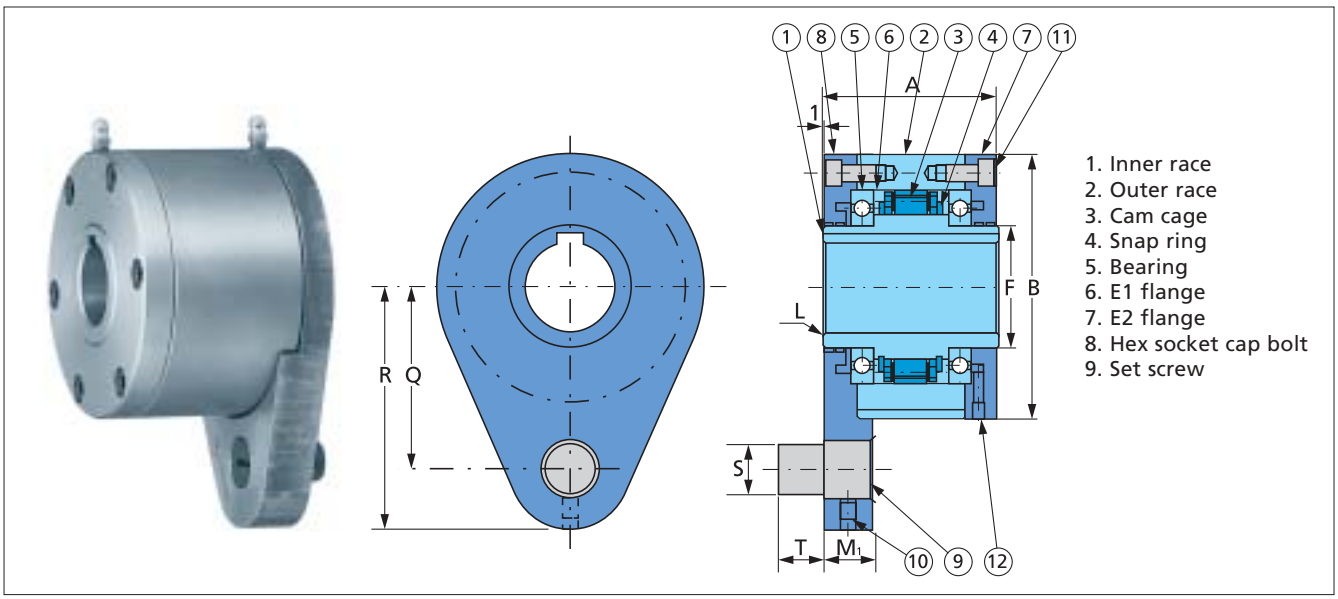


*Basic type BREU Cam Clutch provided with an E2 flange and an E3 torque arm. Summary of parts and dimensions. (Refering to table below.)*

## - dimensions and weight -

| Model | Bore size H7 | Keyway | A | B h7 | F | L | M1 | Q | R | S | T | Weight kg |
|---|---|---|---|---|---|---|---|---|---|---|---|---|
| BREU 30 E2+E3 | 30 | 8×3.3 | 76 | 100 | 45 | 1.0 | 19 | 68 | 92 | 16 | 14 | 4.2 |
| BREU 35 E2+E3 | 35 | 10×3.3 | 79 | 110 | 50 | 1.0 | 22 | 76 | 102 | 20 | 18 | 5.0 |
| BREU 40 E2+E3 | 40 | 12×3.3 | 86 | 125 | 55 | 1.3 | 22 | 85 | 112 | 20 | 18 | 7.0 |
| BREU 45 E2+E3 | 45 | 14×3.8 | 86 | 130 | 60 | 1.3 | 25 | 90 | 120 | 25 | 22 | 7.7 |
| BREU 50 E2+E3 | 50 | 14×3.8 | 94 | 150 | 70 | 1.3 | 25 | 102 | 135 | 25 | 22 | 11.0 |
| BREU 55 E2+E3 | 55 | 16×4.3 | 104 | 160 | 75 | 1.5 | 30 | 108 | 142 | 32 | 25 | 14.0 |
| BREU 60 E2+E3 | 60 | 18×4.4 | 120 | 170 | 80 | 1.5 | 30 | 112 | 145 | 32 | 25 | 17.2 |
| BREU 70 E2+E3 | 70 | 20×4.9 | 134 | 190 | 90 | 1.8 | 35 | 135 | 175 | 38 | 30 | 24.5 |
| BREU 80 E2+E3 | 80 | 22×5.4 | 144 | 210 | 105 | 1.8 | 35 | 145 | 185 | 38 | 30 | 31.9 |
| BREU 90 E2+E3 | 90 | 25×5.4 | 158 | 230 | 120 | 2.0 | 45 | 155 | 205 | 50 | 40 | 41.1 |
| BREU100 E2+E3 | 100 | 28×6.4 | 186 | 270 | 140 | 2.0 | 45 | 180 | 230 | 50 | 40 | 65.0 |
| BREU130 E2+E3 | 130 | 32×7.4 | 212 | 310 | 160 | 2.5 | 60 | 205 | 268 | 68 | 55 | 94.0 |
| BREU150 E2+E3 | 150 | 36×8.4 | 246 | 400 | 200 | 2.5 | 60 | 255 | 325 | 68 | 55 | 190.0 |

## - installation and usage -

1. By installing E2 flange and E3 torque arm in the opposite way, the direction of rotation can be changed.
2. When mounting the clutch onto the shaft, apply pressure to the inner race but never to the outer race. Tap the inner race lightly with a soft hammer moving around the race circumference so the Cam Clutch moves slowly and uniformly onto the end of the shaft.
3. All models are pre-greased.
4. Fix grease nipples to optional parts.
5. The ambient temperature range is -40°C to +40°C.
6. Refer to page 2 for additional installation instructions and to page 10 for information on lubrication and maintenance.

NOTE

Too much additional greasing of the bearings will cause malfunction of the Cam Clutch mechanism.

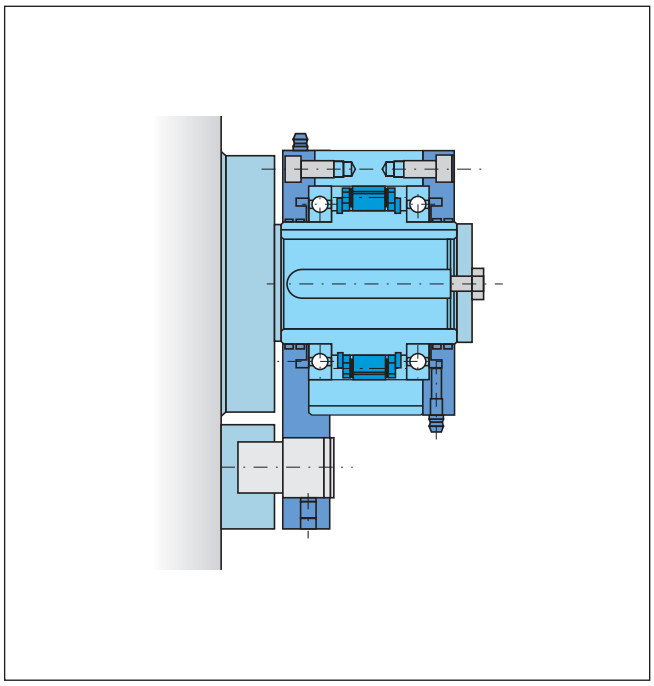

*Installation example 3.*

# - Cam Clutches BREU-series with E3 torque arm and E4 cover -

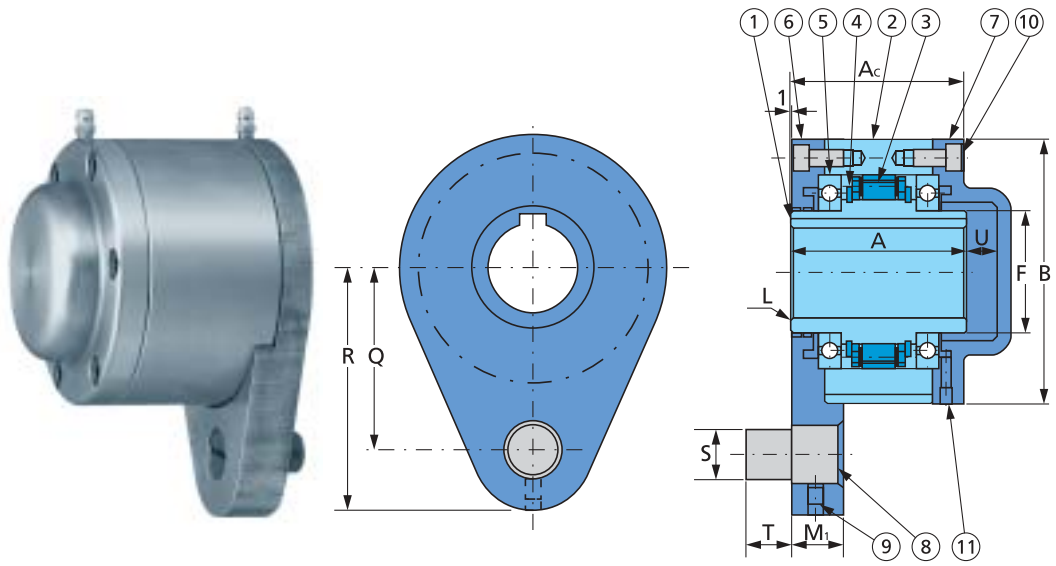


1. Inner race
2. Outer race
3. Cam cage
4. Snap ring
5. Bearing
6. E3 Torque arm
7. E4 Cover
8. Pin
9. Set screw
10. Hex socket cap bolt
11. Set screw

*Basic type BREU Cam Clutch provided with an E3 torque arm and an E4 cover. Summary of parts and dimensions. (Refering to table below.)*

## - dimensions and weight -

| Model | Bore size | Keyway | A | AC | B | F | L | M1 | Q | R | S | T | U | Weight |
|---|---|---|---|---|---|---|---|---|---|---|---|---|---|---|
| | H7 | | | | h7 | | | | | | | | | kg |
| BREU 30 E3+E4 | 30 | 8×3.3 | 76 | 92.0 | 100 | 45 | 1.0 | 19 | 68 | 92 | 16 | 14 | 10.0 | 4.5 |
| BREU 35 E3+E4 | 35 | 10×3.3 | 79 | 97.0 | 110 | 50 | 1.0 | 22 | 76 | 102 | 20 | 18 | 12.0 | 5.3 |
| BREU 40 E3+E4 | 40 | 12×3.3 | 86 | 105.0 | 125 | 55 | 1.3 | 22 | 85 | 112 | 20 | 18 | 12.0 | 7.4 |
| BREU 45 E3+E4 | 45 | 14×3.8 | 86 | 108.0 | 130 | 60 | 1.3 | 25 | 90 | 120 | 25 | 22 | 15.0 | 8.1 |
| BREU 50 E3+E4 | 50 | 14×3.8 | 94 | 113.0 | 150 | 70 | 1.3 | 25 | 102 | 135 | 25 | 22 | 12.0 | 11.5 |
| BREU 55 E3+E4 | 55 | 16×4.3 | 104 | 126.0 | 160 | 75 | 1.5 | 30 | 108 | 142 | 32 | 25 | 15.0 | 15.6 |
| BREU 60 E3+E4 | 60 | 18×4.4 | 120 | 143.0 | 170 | 80 | 1.5 | 30 | 112 | 145 | 32 | 25 | 15.0 | 18.0 |
| BREU 70 E3+E4 | 70 | 20×4.9 | 134 | 164.5 | 190 | 90 | 1.8 | 35 | 135 | 175 | 38 | 30 | 22.5 | 25.5 |
| BREU 80 E3+E4 | 80 | 22×5.4 | 144 | 168.0 | 210 | 105 | 1.8 | 35 | 145 | 185 | 38 | 30 | 16.0 | 32.9 |
| BREU 90 E3+E4 | 90 | 25×5.4 | 158 | 192.0 | 230 | 120 | 2.0 | 45 | 155 | 205 | 50 | 40 | 27.0 | 43.4 |
| BREU100 E3+E4 | 100 | 28×6.4 | 186 | 221.0 | 270 | 140 | 2.0 | 45 | 180 | 230 | 50 | 40 | 28.0 | 67.0 |
| BREU130 E3+E4 | 130 | 32×7.4 | 212 | 250.0 | 310 | 160 | 2.5 | 60 | 205 | 268 | 68 | 55 | 30.0 | 97.0 |
| BREU150 E3+E4 | 150 | 36×8.4 | 246 | 286.0 | 400 | 200 | 2.5 | 60 | 255 | 325 | 68 | 55 | 32.0 | 193.0 |

## - installation and usage -

1. By installing the E3 torque arm and the E4 cover in the opposite way, the direction of rotation can be changed.
2. When mounting the clutch onto the shaft, apply pressure to the inner race but never to the outer race. Tap the inner race lightly with a soft hammer moving around the race circumference so the Cam Clutch moves slowly and uniformly onto the end of the shaft.
3. All models are pre-greased.
4. Fix grease nipples to optional parts.
5. The ambient temperature range is -40°C to +40°C.
6. Refer to page 2 for additional installation instructions and to page 10 for information on lubrication and maintenance.

NOTE

Too much additional greasing of the bearings will cause malfunction of the Cam Clutch mechanism.

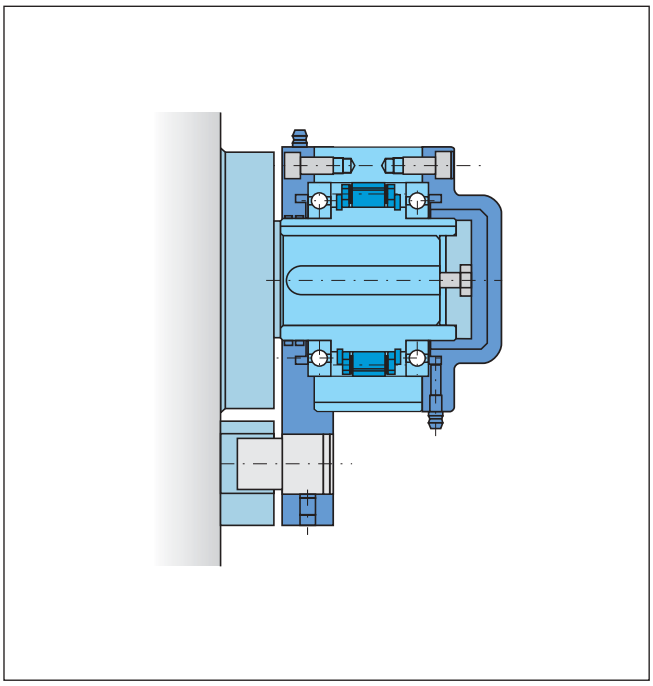

*Installation example 4.*

# - Cam Clutches BREU-series with E5 flange on both sides -

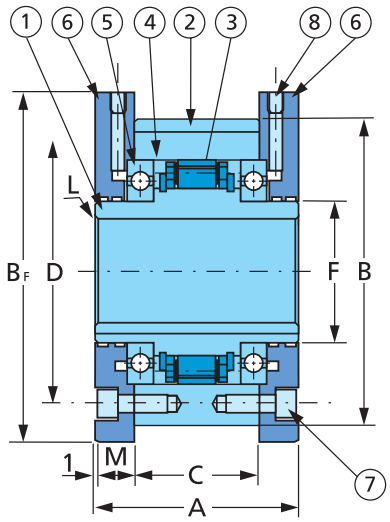


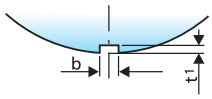


1. Inner race
2. Outer race
3. Cam cage
4. Snap ring
5. Bearing
6. E5 flange
7. Hex socket cap bolt
8. Set screw

*Basic type BREU Cam Clutch provided with an E5 flange on both sides. Summary of parts and dimensions. (Refering to table below.)*

## - dimensions and weight -

| Model | Bore size | Keyway | A | B | BF | C | D | F | L | M | b | t1 | Weight |
|---|---|---|---|---|---|---|---|---|---|---|---|---|---|
| | H7 | | | h7 | | | | | | | P10 | | kg |
| BREU 30K E5+E5 | 30 | 8×3.3 | 76 | 100 | 109 | 51 | 87 | 45 | 1.0 | 11.5 | 8 | 4.0 | 3.9 |
| BREU 35K E5+E5 | 35 | 10×3.3 | 79 | 110 | 119 | 50 | 96 | 50 | 1.0 | 13.5 | 10 | 5.0 | 4.9 |
| BREU 40K E5+E5 | 40 | 12×3.3 | 86 | 125 | 135 | 53 | 108 | 55 | 1.3 | 15.5 | 12 | 5.0 | 7.0 |
| BREU 45K E5+E5 | 45 | 14×3.8 | 86 | 130 | 140 | 53 | 112 | 60 | 1.3 | 15.5 | 14 | 5.5 | 7.4 |
| BREU 50K E5+E5 | 50 | 14×3.8 | 94 | 150 | 160 | 64 | 132 | 70 | 1.3 | 14.0 | 14 | 5.5 | 10.7 |
| BREU 55K E5+E5 | 55 | 16×4.3 | 104 | 160 | 170 | 66 | 138 | 75 | 1.5 | 18.0 | 16 | 6.0 | 13.6 |
| BREU 60K E5+E5 | 60 | 18×4.4 | 120 | 170 | 182 | 84 | 150 | 80 | 1.5 | 17.0 | 18 | 7.0 | 17.3 |
| BREU 70K E5+E5 | 70 | 20×4.9 | 134 | 190 | 202 | 95 | 165 | 90 | 1.8 | 18.5 | 20 | 7.5 | 23.5 |
| BREU 80K E5+E5 | 80 | 22×5.4 | 144 | 210 | 222 | 100 | 185 | 105 | 1.8 | 21.0 | 22 | 9.0 | 31.3 |
| BREU 90K E5+E5 | 90 | 25×5.4 | 158 | 230 | 242 | 115 | 206 | 120 | 2.0 | 20.5 | 25 | 9.0 | 38.4 |
| BREU100K E5+E5 | 100 | 28×6.4 | 186 | 270 | 282 | 124 | 240 | 140 | 2.0 | 30.0 | 28 | 10.0 | 63.0 |
| BREU130K E5+E5 | 130 | 32×7.4 | 212 | 310 | 322 | 152 | 278 | 160 | 2.5 | 29.0 | 32 | 11.0 | 88.0 |
| BREU150K E5+E5 | 150 | 36×8.4 | 246 | 400 | 412 | 180 | 360 | 200 | 2.5 | 32.0 | 36 | 12.0 | 184.0 |

## - installation and usage -

1. By turning the Cam Clutch the opposite way, the direction of rotation can be changed.
2. When mounting the clutch onto the shaft, apply pressure to the inner race but never to the outer race. Tap the inner race lightly with a soft hammer moving around the race circumference so the Cam Clutch moves slowly and uniformly onto the end of the shaft.
3. All models are pre-greased.
4. Fix grease nipples to optional parts.
5. The ambient temperature range is -40°C to +40°C.
6. Refer to page 2 for additional installation instructions and to page 10 for information on lubrication and maintenance.

NOTE

Too much additional greasing of the bearings will cause malfunction of the Cam Clutch mechanism.

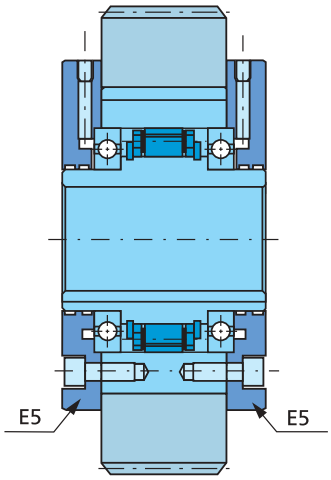


*Installation example 5.*

# - Cam Clutches BREU-series with E2 and E7 flange -

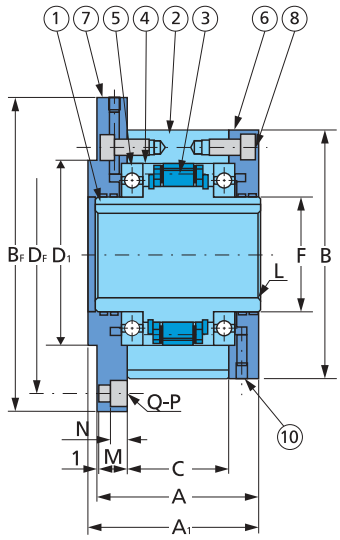


1. Inner race
2. Outer race
3. Cam cage
4. Snap ring
5. Bearing
6. E2 flange
7. E7 flange
8. Hex socket cap bolt
9. Set screw

*Basic type BREU Cam Clutch provided with an E7 and an E2 flange. Summary of parts and dimensions. (Refering to table below.)*

## - dimensions and weight -

| Model | Bore size H7 | Keyway | A | $A_1$ | B h7 | $B_F$ | C | $D_1$ h7 | DF | F | L | M | N | Q-P | Weight kg |
|---|---|---|---|---|---|---|---|---|---|---|---|---|---|---|---|
| BREU 30 E2+E7 | 30 | 8×3.3 | 76 | 78 | 100 | 128 | 51 | 75 | 114 | 45 | 1.0 | 11.5 | 6.8 | 6-Ø 6.6 | 4.2 |
| BREU 35 E2+E7 | 35 | 10×3.3 | 79 | 81 | 110 | 140 | 50 | 80 | 124 | 50 | 1.0 | 13.0 | 6.8 | 6-Ø 6.6 | 5.3 |
| BREU 40 E2+E7 | 40 | 12×3.3 | 86 | 88 | 125 | 160 | 53 | 90 | 142 | 55 | 1.3 | 15.0 | 9.0 | 6-Ø 9.0 | 7.6 |
| BREU 45 E2+E7 | 45 | 14×3.8 | 86 | 88 | 130 | 165 | 53 | 95 | 146 | 60 | 1.3 | 15.0 | 9.0 | 8-Ø 9.0 | 8.0 |
| BREU 50 E2+E7 | 50 | 14×3.8 | 94 | 96 | 150 | 185 | 64 | 110 | 166 | 70 | 1.3 | 13.0 | 9.0 | 8-Ø 9.0 | 11.3 |
| BREU 55 E2+E7 | 55 | 16×4.3 | 104 | 106 | 160 | 204 | 66 | 115 | 182 | 75 | 1.5 | 17.0 | 11.0 | 8-Ø 11 | 14.8 |
| BREU 60 E2+E7 | 60 | 18×4.4 | 120 | 122 | 170 | 214 | 84 | 125 | 192 | 80 | 1.5 | 16.0 | 11.0 | 10-Ø 11 | 18.2 |
| BREU 70 E2+E7 | 70 | 20×4.9 | 134 | 136 | 190 | 234 | 95 | 140 | 212 | 90 | 1.8 | 17.5 | 11.0 | 10-Ø 11 | 24.8 |
| BREU 80 E2+E7 | 80 | 22×5.4 | 144 | 146 | 210 | 254 | 100 | 160 | 232 | 105 | 1.8 | 20.0 | 11.0 | 10-Ø 11 | 32.9 |
| BREU 90 E2+E7 | 90 | 25×5.4 | 158 | 160 | 230 | 278 | 115 | 180 | 254 | 120 | 2.0 | 19.0 | 13.0 | 10-Ø 14 | 40.8 |
| BEEU100 E2+E7 | 100 | 28×6.4 | 186 | 188 | 270 | 335 | 124 | 210 | 305 | 140 | 2.0 | 28.0 | 17.5 | 10-Ø 18 | 69.0 |
| BREU130 E2+E7 | 130 | 32×7.4 | 212 | 214 | 310 | 380 | 152 | 240 | 345 | 160 | 2.5 | 27.0 | 17.5 | 12-Ø 18 | 96.0 |
| BREU150 E2+E7 | 150 | 36×8.4 | 246 | 248 | 400 | 485 | 180 | 310 | 445 | 200 | 2.5 | 30.0 | 21.5 | 12-Ø 22 | 198.0 |

## - installation and usage -

1. By installing E2 flange and E7 flange in the opposite way, the direction of rotation can be changed.
2. When mounting the clutch onto the shaft, apply pressure to the inner race but never to the outer race. Tap the inner race lightly with a soft hammer moving around the race circumference so the Cam Clutch moves slowly and uniformly onto the end of the shaft.
3. All models are pre-greased
4. Fix grease nipples to optional parts
5. The ambient temperature range is -40°C to +40°C.
6. Too much overhang load to the F7 flange will cause troublesome operation and damage the Cam Clutch mechanism. In cases where excessive overhang load is applied, Tsubaki recommends an additional bearing to be installed onto the fixed equipment on the correct centerline.
7. Refer to page 2 for additional installation instructions and to page 10 for information on lubrication and maintenance.

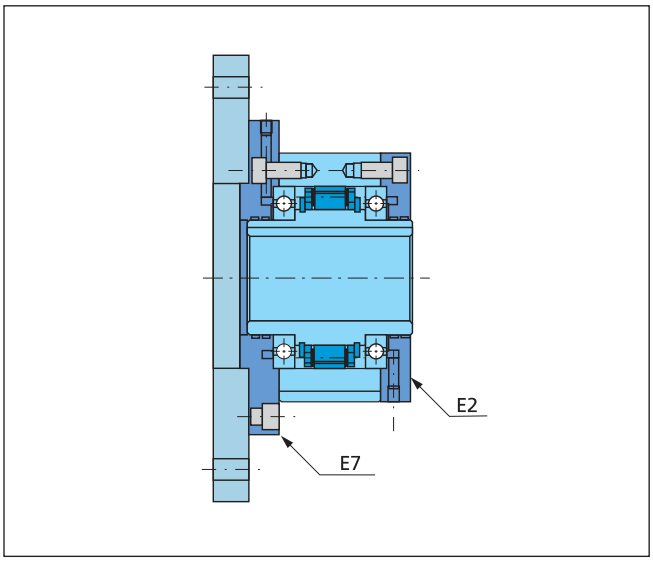


*Installation example 6.*

NOTE

Too much additional greasing of the bearings will cause malfunction of the Cam Clutch mechanism.

# - couplings based on Cam Clutches BREU-series -

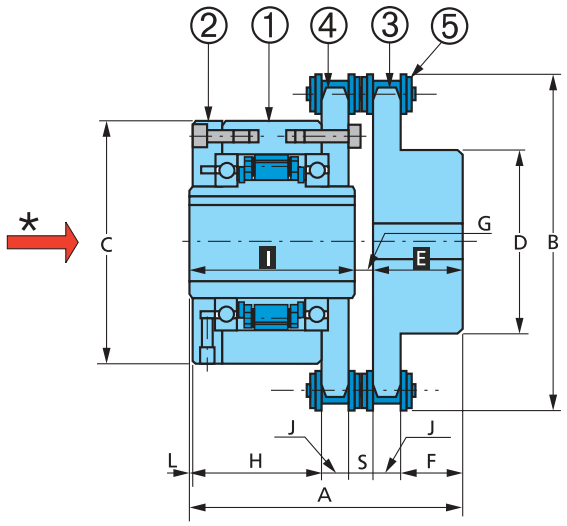


1. BREU Cam clutch
2. E1 flange
3. Sprocket A
4. Sprocket B
5. Roller chain

*Summary of parts and dimensions (refering to table below).*

## - dimensions and weights -

| Model | Bore size | Keyway | A | B | C | D | E | F | G | H | I | J | L | S | Weight |
|---|---|---|---|---|---|---|---|---|---|---|---|---|---|---|---|
| | H7 | | | | h7 | | | | | | | | | | kg |
| BREU 30-C | 30 | 8×3.3 | 109.9 | 137 | 100 | 73 | 28 | 19.3 | 5.9 | 62.5 | 76 | 8.7 | 1 | 9.7 | 5.9 |
| BREU 35-C | 35 | 10×3.3 | 127.7 | 152 | 110 | 83 | 40 | 28.3 | 8.7 | 63.5 | 79 | 11.7 | 1 | 11.5 | 8.5 |
| BREU 40-C | 40 | 12×3.3 | 132.7 | 164 | 125 | 83 | 40 | 28.3 | 6.7 | 68.5 | 86 | 11.7 | 1 | 11.5 | 10.5 |
| BREU 45-C | 45 | 14×3.8 | 132.7 | 176 | 130 | 83 | 40 | 28.3 | 6.7 | 68.5 | 86 | 11.7 | 1 | 11.5 | 11.2 |
| BREU 50-C | 50 | 14×3.8 | 142.2 | 200 | 150 | 83 | 40 | 28.3 | 8.2 | 78.0 | 94 | 11.7 | 1 | 11.5 | 15.6 |
| BREU 55-C | 55 | 16×4.3 | 159.8 | 219 | 160 | 107 | 45 | 30.4 | 10.8 | 84.0 | 104 | 14.6 | 1 | 15.2 | 21.8 |
| BREU 60-C | 60 | 18×4.4 | 176.8 | 235 | 170 | 107 | 45 | 30.4 | 11.8 | 101.0 | 120 | 14.6 | 1 | 15.2 | 26.4 |
| BREU 70-C | 70 | 20×4.9 | 189.3 | 251 | 190 | 107 | 45 | 30.4 | 10.3 | 113.5 | 134 | 14.6 | 1 | 15.2 | 33.0 |
| BREU 80-C | 80 | 22×5.4 | 196.8 | 267 | 210 | 107 | 45 | 30.4 | 7.8 | 121.0 | 144 | 14.6 | 1 | 15.2 | 41.0 |

| Model | Sprocket | Roller chain weight (kg) | | | | Sprocket A type | | | | CP total | Basic | E2 | BREU-C |
|---|---|---|---|---|---|---|---|---|---|---|---|---|---|
| | weight (kg) | 1 m (W) | length | total l. | weight | PCD | d | T | weight | weight | type | flange | weight |
| BREU 30-C | 1.4 | 2.07 | 15.875 | 0.3810 | 0.788670 | 12.162 | 7.5 | 0.89 | 0.50272 | 2.691 | 2.7 | 0.473 | 5.864 |
| BREU 35-C | 2.5 | 3.04 | 19.05 | 0.4191 | 1.274064 | 13.386 | 8.0 | 1.19 | 0.84466 | 4.619 | 3.2 | 0.686 | 8.505 |
| BREU 40-C | 2.6 | 3.04 | 19.05 | 0.4572 | 1.389888 | 14.595 | 9.0 | 1.19 | 0.96807 | 4.958 | 4.4 | 1.076 | 10.434 |
| BREU 45-C | 2.7 | 3.04 | 19.05 | 0.4953 | 1.505712 | 15.804 | 9.5 | 1.19 | 1.16975 | 5.375 | 4.7 | 1.107 | 11.182 |
| BREU 50-C | 3.4 | 3.04 | 19.05 | 0.5715 | 1.737360 | 18.252 | 11.0 | 1.19 | 1.55561 | 6.693 | 7.6 | 1.268 | 15.561 |
| BREU 55-C | 5.4 | 5.27 | 25.40 | 0.6096 | 3.212592 | 19.460 | 11.5 | 1.50 | 2.27795 | 10.891 | 8.9 | 1.995 | 21.786 |
| BREU 60-C | 5.9 | 5.27 | 25.40 | 0.6604 | 3.480308 | 21.072 | 12.5 | 1.50 | 2.66005 | 12.040 | 12.5 | 1.829 | 26.369 |
| BREU 70-C | 6.5 | 5.27 | 25.40 | 0.7112 | 3.748024 | 22.686 | 14.0 | 1.50 | 2.94544 | 13.193 | 17.2 | 2.606 | 32.999 |
| BREU 80-C | 7.1 | 5.27 | 25.40 | 0.7620 | 4.015740 | 24.300 | 16.0 | 1.50 | 3.09182 | 14.208 | 22.4 | 3.752 | 40.360 |

## - installation and usage -

1. BREU-C Series Cam Clutch Couplings are a combination of BREU Cam Clutches equipped with a Tsubaki type Chain Couplings (without covers/casings).
2. Firstly mount the Cam Clutch loosely onto the high-speed shaft.
3. Accurately align both sprockets by checking with a straight edge on the teeth of both sprockets.
4. Specify right hand (RH) or left hand (LH) as inner race overrunning direction from the view of the Cam Clutch side when ordering. See the above drawing (*).
5. Use the same lubricant for the coupling chain as for Tsubaki roller chains.
6. Ensure that the chain is properly installed. If using a spring type connecting link ensure the closed end of the spring clip is fitted in the same direction as the rotation of the outer race.

# - greasing and maintenance of Cam Clutches BREU-series -

## - lubrication -

BREU Series Cam Clutches need periodic maintenance and lubrication to both bearings providing the maximum performance throughout the Cam Clutch' service life.

The Cam Mechanism DOES NOT require any maintenance therefore never use an excessive quantity of grease, yet lack of prescribed maintenance and lubrication will shorten the Service Life of the Cam Clutch and may cause unnecessary mechanical damage.

**Recommended grease for Cam Clutches of the BREU-series**

| Oil company | Ambient temperature | |
|---|---|---|
| | - 5° C ~ + 40° C | - 40° C ~ + 40° C |
| Esso | Beacon 2 | Beacon 325 |
| Mobil | Mobilux Grease No. 2 | Mobil temp SHC 100 |
| Shell | Alvaria Grease No. 2 | Alvaria Grease RA |
| BP | Energrease LS2 | Energrease LT2 |
| Total | Multis 2 | Aerogrease 22 |

Note: Do not use grease containing EP additives when selecting any other brand or make.



## - maintenance -

BREU series Cam Clutches are pre-greased at the factory and the integrated bearings should be re-greased every three month after installation. Follow the procedures below.

Remove the setscrew at the flange, torque arm, cover or fitted part. Inject equal amounts of grease into both bearings via the grease nipples. Refer to the grease volume table for the correct amount.

Run the Cam Clutch disengaged for 20 to 30 minutes with setscrew removed. Excessive grease in the clutch area will flow out of the tapped holes.

Wipe off excessive grease and re-install the set screw.

**Grease volume table**

| Model | Each bearing (g) | Model | Each bearing (g) |
|---|---|---|---|
| BREU 30 | 10 | BREU 70 | 50 |
| BREU 35 | 10 | BREU 80 | 80 |
| BREU 40 | 15 | BREU 90 | 90 |
| BREU 45 | 20 | BREU100 | 160 |
| BREU 50 | 30 | BREU130 | 260 |
| BREU 55 | 30 | BREU150 | 460 |
| BREU 60 | 40 | | |

## - warning -

**Use with care to prevent injury**

**Comply with the following to avoid serious personal injury**

1. Guards must be provided on all power transmission and conveyor applications in accordance with provisions of ANSI/ASME B 15.1 1992 and ANSI/ASME B 20.1 1993 or other applicable standards. When revisions of these standards are published, the updated edition shall apply.
2. Always lock out power switch before installing, removing, lubricating or servicing a system that uses Cam Clutch products.
3. If the Cam Clutch is used for repeated starting and stopping, make sure the strength of the supports for the Cam Clutch are sufficient.
4. The capacity of your Cam Clutch may be effected by the accuracy of its set up, the amount of pressure exerted on it, wear on other parts in your system, or wear life of the Cam Clutch itself. Check the Cam Clutch at regular intervals and observe any necessary safety precautions.
5. When connecting or disconnecting Cam Clutch products, eye protection is required. Wear safety glasses, protective clothing, gloves and safety shoes.

# - more Cam Clutches from Tsubaki Emerson -

Tsubaki Emerson developed many series of Cam Clutches to meet any industrial demand. Except for the series mentioned in this brochure you may need additional technical solutions to comply with your specific application. The brochures shown below may give you an impression of the vast range of Cam Clutches we can deliver from stock and on customer specifications. Please do not hesitate to contact us for advice or further information.

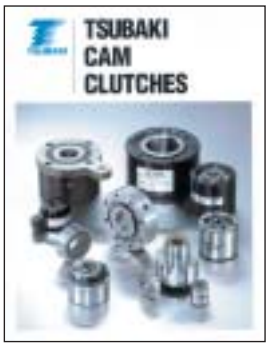


Tsubaki Emerson Cam Clutches are precision devices which lock the inner and outer races through the wedging action of cams to transmit torque in one direction of rotation and overrun in the opposite direction. These units are often referred to as freewheels, sprag, overrunning, backstop, or one-way clutches, depending upon their application. In this brochure you will find the complete range of Cam Clutches according to Japanese and American standards.

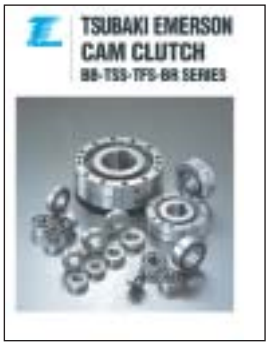


BB (build-in bearing) series Cam Clutches are available with and without keyways on inner race and/or outer race. Moreover the 2GD versions have special lip seals for effective protection against dust.

TSS series are non-bearing supported Cam Clutches and as BB series, dimensionally identical to 6200 series ball bearings, having keyway on the inner race as standard.

TFS series are similar to TSS, however their dimensions are the same as 6300 series bearings.

Both TSS and TFS series do require regular maintenance and lubrication as well as lateral bearing support.

BR series Cam Clutches are designed for backstop and overrunning applications with high speeds, having lift off designed cams ensuring a longer lifetime than any other type of clutch.

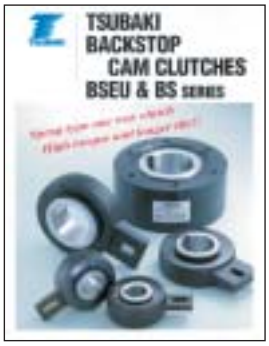


These series of Cam Clutches from Tsubaki Emerson are one-way clutches with the safest rotation prevention qualities available. They are manufactured for installations with low speed shaftrotations of inclined conveyors such as bucket and pivot elevators. Compared to other one-way clutches (ratchet or roller ramp clutch) similar in size, overheating during times when the motor is idling is significantly lower. This helps to maintain superb lubrication qualities thereby improving the wear life of the clutch. Extended fatique life is also obtainable due to the clutch's large torque capacity.

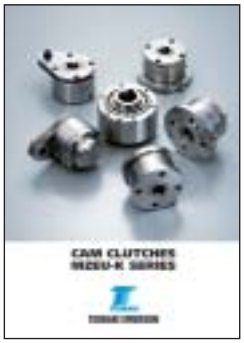


Tsubaki MZEU-K Cam Clutches are sprag type one-way clutches and leader in its class. The one-way clutch was developed originally as a ratchet clutch later to become a roller ramp clutch and finally became Tsubaki's Cam Clutch.

The Tsubaki Cam Clutch ensures a longer life to the mechanism than any other type of one-way clutch.

Tsubaki has a vast amount of experience producing this style of clutche and supplies them to many kinds of industry throughout the world.

MZEU- K series Cam Clutches are the most recent development of one-way clutches, based on historically proven European style clutches.

MZEU-K series Cam Clutches are modular type one way clutches, supplied as basic type clutch with standardized optional parts E1, E2, E5 & E7 flanges, E3 torque arm and E4 cover.

For more information please contact:

TSUBAKIMOTO EUROPE B.V. - Belder 1 - NL 4704 RK Roosendaal - the Netherlands
Tel. +31 (0)165 59 48 00 - Fax +31 (0)165 54 94 50 - E-mail info@tsubaki.nl - Internet http://tsubakimoto.com

TSUBAKI